FA-500 SERIES
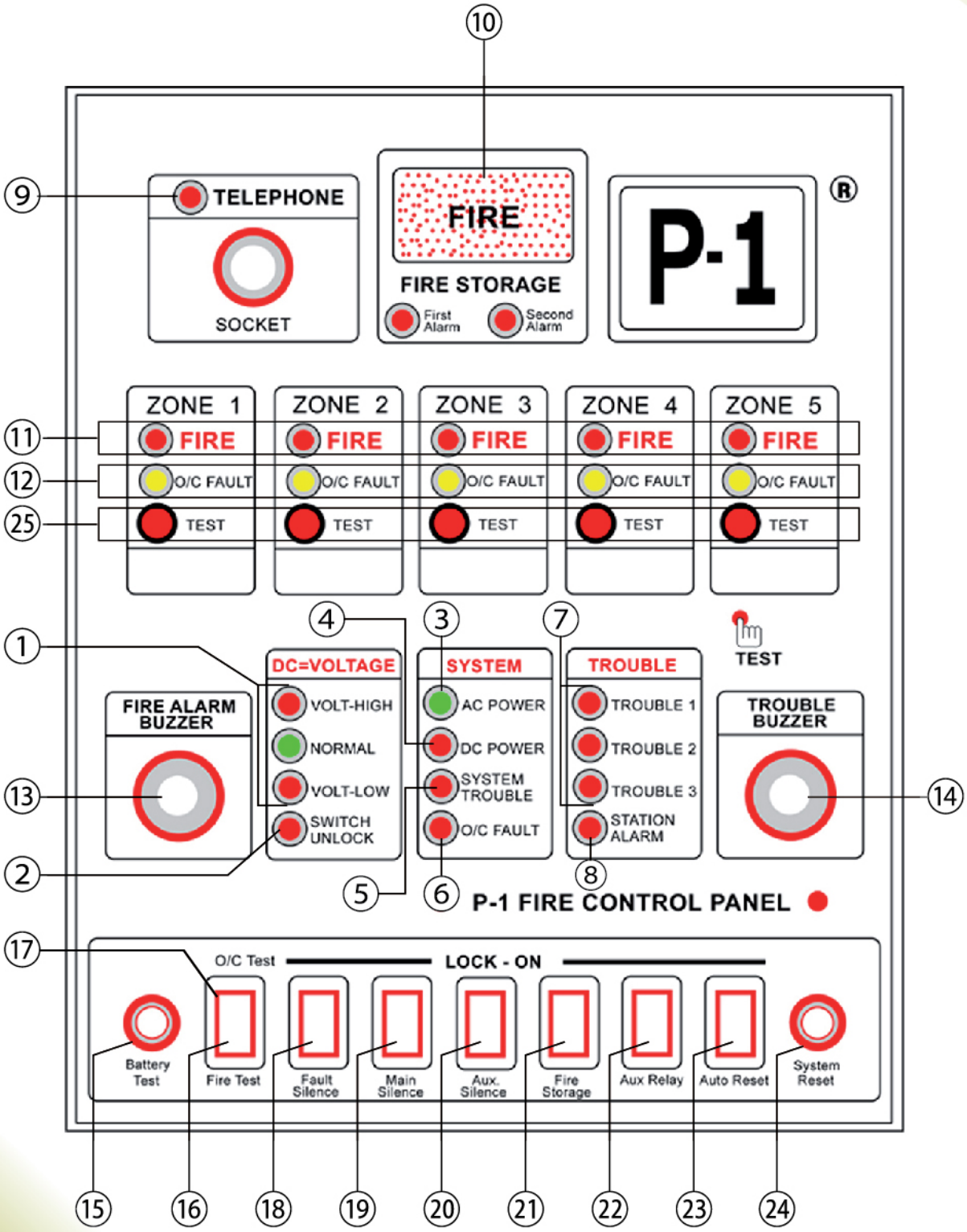
System Control And Indicator On Board